Strata 1

Wall Mounted Compact Gas Fired
Condensing Boilers with outputs
from 38 to 75kW

Qualified for Energy Technology List www.eca.gov.uk

BUILDING REGULATIONS PART L COMPLIANT PART J - SCOTLAND

THE EUROPEAN APPROVAL OF SAFETY & EFFICIENCY CE

MHS BOILERS

At the top of its class

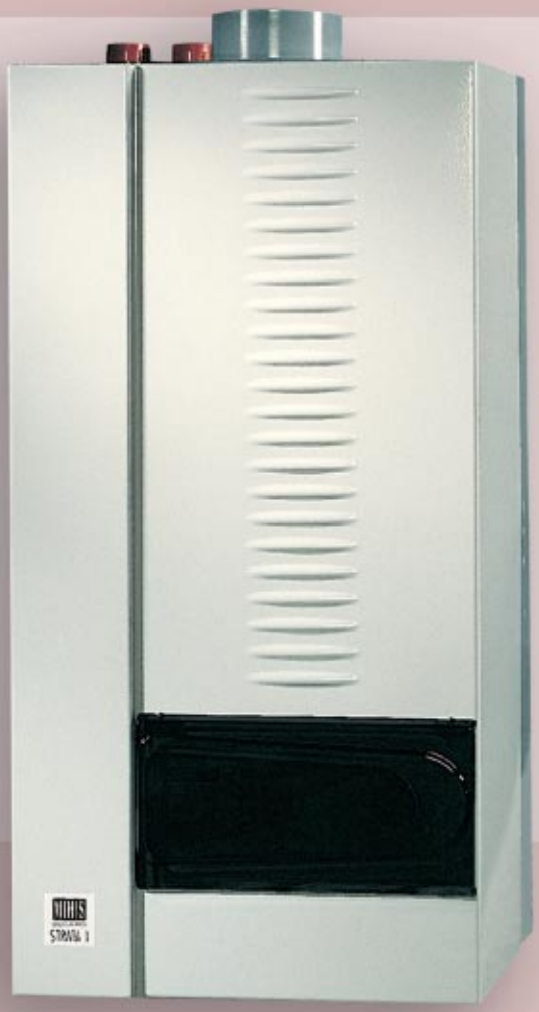

The Strata 1 range of wall mounted gas fired condensing boilers are state of the art advanced appliances with an impressive list of features that few others can compare with. This appliance pioneered the use of the now industry standard stainless steel helical tube type condensing heat exchanger.

With efficiency up to 109% and Sedbuk A rated; the Strata 1 offers the utmost in economy of running.

There are four models in the range with the following outputs at 50/30ºC:

Strata 1 - 38 (7.56 – 37.8kW)
Strata 1 – 45 (9.04 – 45.2kW)
Strata 1 – 60 (11.98 – 59.9kW)
Strata 1 – 75 (15.12 – 75.6kW)

Each includes 5:1 turndown modulating radiant premix burners with ultra clean/ultra low emissions < 20mg/kWh (11.5 ppm) NOx @ 0% O_2.

Standard features

Compact dimensions

Where space in a building for the installation of boiler plant is limited, then at just 950h x 458w x 435d (355d model 38) the Strata 1 is a problem solver and can liberate valuable area for other uses.

Operational reliability

In addition to the efficiency and low emissions of the modulating radiant premix burner, the fully automatic ignition system is inherently reliable due to being multi-try.

Room sealed or open flue option

The boiler is approved for use with open or room sealed flue systems, and due to the low flue gas temperatures and high exhaust pressures; the Strata 1 can be flued over considerable distances using small diameter, low cost polypropylene flue pipe and fittings. Both wall and roof terminals are available.

Intelligent control panel

The control capability is very advanced and in addition to operating the boiler to achieve optimum efficiency and comfort, the boiler is self diagnostic and features data logging and computer diagnostics. At all times, 2 lines of plain English text is displayed on the LCD screen informing the user of the current operational status.

Direct-on-boiler weather compensation

As a condensing boiler, the highest efficiencies are obtained when the return water temperature is low; this operating requirement is easily achieved by allowing the heating system to work with weather variable flow temperatures. Direct-on-Boiler Weather Compensation is a standard feature of the Strata 1 and is easily enabled if desired. An outside air temperature sensor is supplied as standard.

Hot water control

The Strata 1 can be used to heat a domestic hot water cylinder or calorifier and this is normally done with priority over central heating to avoid that unnecessarily high temperature is circulated to the heating when it is being weather compensated. The hot water controls are self learning and the boiler automatically rates itself to the heat transfer capability of the cylinder.

Matched controls

To enhance the capability of the boiler, there are a number of pieces of additional control gear that can be applied to the appliance, such as a modulating room unit which is an optimizing time switch with the capability of modulating the boiler output directly from the room temperature. In addition, pump control and under floor circuit mixing controls and multi boiler cascade managers are available. See page 5 for details.

Warranty

The heat exchanger carries a 5 year guarantee; all other components carry a 12 month guarantee.

All guarantees are against manufacturing or material defects only.

Ease of installation & servicing

The comprehensive control panel is user friendly and displays current status in two lines of text. The model 38 boiler has an inbuilt 3 channel programmer included to provide for 2 heating circuits (1 radiator circuit and 1 under floor circuit) plus domestic hot water.

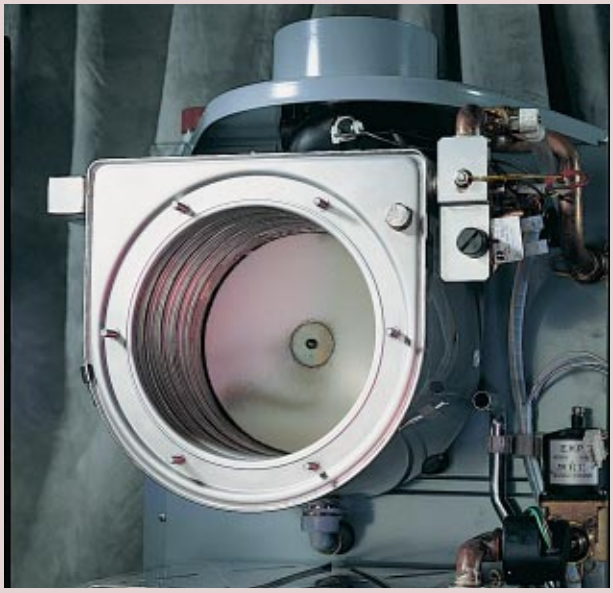

The removal of six fixings gives quick and easy access to the combustion chamber and primary heat exchanger for inspection and maintenance.

A range of prefabricated multi-boiler manifolds and vertical low loss headers plus easy fit insulating jackets are available as optional extras to simplify modular boiler installations of up to 300kW or 5 boilers which ever is the larger.

Dimensions & technical data

Clearances

For ease of installation, commissioning and maintenance the following minimum clearances should be observed:

Sides 50mm **Above** 250mm **Below** 150mm **Front** 450mm

Plan - models 45/60/75

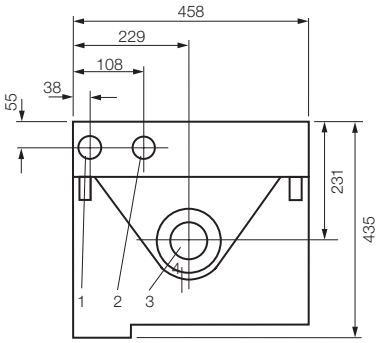

Underside - models 45/60/75

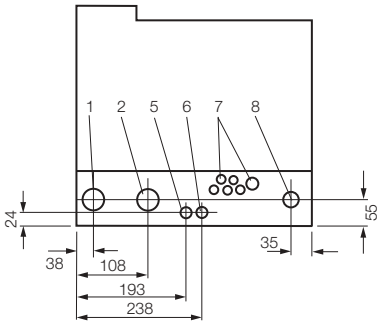

Plan - model 38

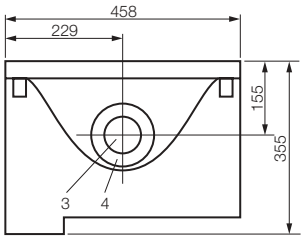

Underside - model 38

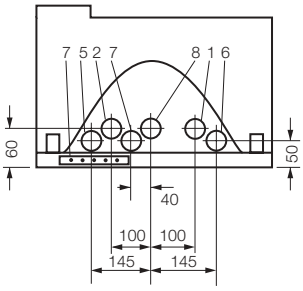

Dimensions in millimetres

Model	Strata 1	38	45	60	75
Nominal Heat Input Nett (max)	kW	36	43	57	72
Nominal Heat Output 80/60°C	kW	6.9-34.6	8.2-41.3	10.9-54.7	13.8-69.1
Nominal Heat Output 50/30°C	kW	7.5-37.8	9.0-45.2	11.9-59.9	15.1-75.6
Input Rate Nat Gas (max)	m³/h	4.7(HWS)	4.7	5.9	7.6
Minimum/Maximum Gas Pressure	mbar	18/60	18/60	18/60	18/60
Flue Gas Volume (Hot)	m³/h	64(HWS)	64	81	104
Pressure at Flue Outlet	Pa	100	100	100	100
Maximum Working Pressure	Bar	3.0	3.0	3.0	3.0
Minimum Working Pressure	Bar	0.5	0.5	0.5	0.5
Maximum Flow Temperature	°C	85	85	85	85
Power Supply	V	230	230	230	230
Fuse Rating	A	3.0	3.0	3.0	3.0
Average Power Consumption	Watts	70	115	115	115
Water Content	L	2.5	6	7	8
Weight (Dry)	kg	39	60	66	73

Connection Strata 1	38	45	60	75
1.Return	22mm	1¼" BSP-M	1¼" BSP-M	1¼" BSP-M
2.Flow	22mm	1¼" BSP-M	1¼" BSP-M	1¼" BSP-M
3.Flue Gas (OD)	80mm	80mm	80mm	80mm
4.Air Duct (OD)	125mm	125mm	125mm	125mm
5.Condense Syphon Cleaning Point (capped)	3/4" BSP	3/4" BSP	3/4" BSP	3/4" BSP
6.Condense Waste	3/4" BSP-M	¾" BSP-M	¾" BSP-M	¾" BSP-M
7.Cable Entries	Mutiple grometts	Mutiple grometts	Mutiple grometts	Mutiple grometts
8.Gas	15mm	¾" BSP-M	¾" BSP-M	¾" BSP-M

Note

Models 45,60 and 75 have flow and return water connections at the top and bottom of the appliance. There is the option to utilize both top connections, both bottom connections or one of each.

The model 38 has bottom connections only.

Front - all models

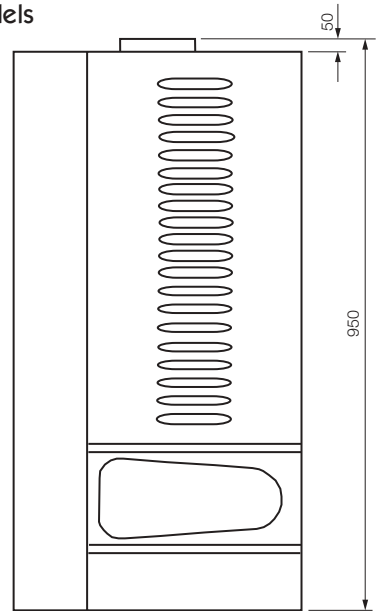

Optional extra matched controls

The following range of optional extra controls are perfectly matched to the boilers and use the same operational protocol that is used internally within the boiler's own control panel and offer the opportunity to obtain the best in terms of comfort and efficiency. Whereas the Strata 1 range of boilers will operate with a host of external controls available in the market place, for the optimum in control over the operation of the boiler and best control/boiler harmony, it is strongly recommended to select controls from the list below wherever possible.

RE2132 modulating room unit

A compact and comprehensive room temperature and time control device which provides user friendly programming menus for setting the wanted comfort conditions. The unit features optimum start and stop capability and will modulate the output of the boiler directly to achieve and maintain the room temperature set point for optimum comfort and economy. Night set back, frost protection and holiday programming are all standard features plus the ability to operate with an additional room temperature sensor which may have some or all of the sensing capability which allows for averaging if required. Another option is to set up the unit without room sensing where the setpoint shift control provides remote parallel shift of the weather compensation slope.

The RE2132 can be connected to a single boiler to provide control over the connected radiator heating circuit or to a KKM2 Cascade Manager to provide control over a heating circuit served by a multi – boiler installation.

RE2132

Dimensions
143H x 97W x 34D

QAW44 remote room temperature sensor

For use with an RE2132 unit, it can be set to give 100% of the temperature sensing duty so that the RE2132 may be located where it is free from tampering, or the remote sensor may used in conjunction with the temperature sensing capability of the RE2132 so that temperature averaging between two positions may be achieved.

QAW44

Dimensions
100H x 90W x 32D

PR01 heating circuit pump controller

If it is decided to install a heating circuit pump, then the PR01 provides the optimum interface to allow the boiler to control the pump. It is a compact wall mounted device complete with all necessary electrical connection leads and in addition to operating the heating pump in accordance with demand, it also prevents the heating circuit pump from running whilst hot water is generated, thus allowing priority to the HWS (which avoids high temperature water from being circulated to a radiators that are operated with weather compensation whilst HWS is generated). Another feature is the tandem running of the heating pump when the boiler exercises its own built in pump or if the boiler operates in frost protection mode; normal operational pump overrun is also accorded. The hot water priority feature allows the boiler output to be selected to meet just the heating load or just the hot water load, whichever is the larger. If HWS priority is not required, then time and temperature control of both the heating and hot water should be effected by others.

PRO1

Dimensions
140H x 115W x 60D

The unit should be located within 1m (approx) of the bottom r/h corner of the boiler to ensure sufficient reach of the control cables which plug into the boiler's control panel..

MR03 combined under floor heating circuit zone controller plus heating circuit pump controller

Similar device to the PR01 unit mentioned above and has the same control capability as the PR01 but with the ability to control a motorised 3 way mixing valve and pump for an under floor heating circuit. It comes complete with a temperature sensor for the mixed flow circuit and can be set to provide a different compensation slope to that which has been set in the boiler for the radiator zone. It also has connections for an additional RE2132 modulating room unit to be connected to control the under floor circuit. See note on following page.

MRO3

Dimensions
140H x 115W x 60D

The unit should be located within 1m (approx) of the bottom r/h corner of the boiler to ensure sufficient reach of the control cables which plug into the boiler's control panel..

Optional extra matched controls

KKM2 cascade manager

Up to five Strata 1 boilers may be controlled in cascade fashion with direct-on-boiler weather compensation if required. One constant flow heating circuit and a domestic hot water calorifier circuit can be also be controlled (with hot water priority). Boilers of unequal output may be connected together in the same group. The KKM will cascade boiler power to meet the demand and utilizing the principle that it is more efficient to fire as many boilers as possible at part load to meet the demand. The KKM2 can be enabled using either volt free contacts, an analogue voltage in input (0-3V dc or * 0-10V dc) or an RE2132 Modulating Room Unit.

Outside air temperature and flow and return water temperature sensors are included.

* 0-10V Analogue Voltage Input Adaptor: If required, a single boiler or a KKM2 Cascade Manager may be enabled and driven up/down by an analogue control voltage. No adaptor is required if the control voltage is in the range 0-3V dc.

KKM2

Dimensions
230H x 245W x 125D

Note
RE2132 Modulating Room Unit usage in conjunction with MR03 Controller: There is the option to have one or two RE2132 units connected when using an MR03. If two units are required, then the controller for the radiator zone must be connected to the boiler and the controller for the under floor circuit must be connected to the MR03. If just one RE2132 unit is required to control both heating circuits with common operational timing and room temperature settings, then the single RE2132 must be connected to the boiler. Likewise, if just an under floor circuit is to be controlled, then the RE2132 must be connected to the boiler and not to the MR03.

Installation requirements

Strata 1 boilers should be installed in accordance with the relevant requirements of the Building Regulations, Health and Safety Regulation PM5, IEE Regulations, National and Local Water Bylaws, Gas Safety (Installation and Use) Regulations and any insurance company requirements.

Codes of practice

- BS 6880 Code of Practice for low temperature hot water heating systems of output greater than 45kW.
- BS 6644 Installation of gas fired hot water boilers of rated inputs between 70kW (net) and 1.8MW (net).
- BS 6798 Specification for installation of gas fired hot water boilers of rated input not exceeding 60kW.
- BS 5440 Installation of flues and ventilation for gas appliances of rated input not exceeding 70kW nett parts 1 & 2.
- CIBSE Guide Reference sections B7,B11 and B13.
- IGE/UP/2 Gas installation pipework and compressors on industrial and commercial premises.
- IGE/UP/10 Installation of Gas Appliances in Industrial and Commercial Premises. Part 1: Flued Appliances.

System water

Strata 1 boilers must only be installed onto sealed and pressurised systems with a minimum static head of 5m. All systems must be thoroughly cleansed prior to the connection of the boiler and the system water must be dosed with a good quality treatment to prevent corrosion within the system and the formation of scale within the boiler waterways. Particular care must be taken when installing the boiler onto an old system, with consideration given to the installation of a dirt arrester/filter.

For specialist advice and water treatment products contact:

Fernox, Tandem House
Marlowe Way
Beddington Farm Road
Croydon CR0 4XS
Tel: 0208 665 6666

Betz Dearborn Ltd
Widnes
Cheshire WA8 8UD
Tel: 0151 495 1861

Meeting the minimum efficiency requirements of the Building Regulations Part L

In order to satisfy the requirements of the Parts L2A & L2B (effective 06/04/2006), a minimum heat generating gross seasonal efficiency of 84% must be achieved. The gross seasonal efficiency must be calculated using formulae found in the Non Domestic Heating and Cooling Compliance Guide. The following data is correct for the Strata 1 Boilers and is calculated using the required formula.

Model	**Strata 1/38**	**Strata 1/45**	**Strata 1/60**	**Strata 1/75**
Gross Seasonal Efficiency	95.44%	96.38%	96.52%	95.74%

Filling the system – as applicable

The Initial filling of a sealed heating system, and subsequent refilling, must be by a method that has been approved by the Water Regulation Advisory Scheme (WRAS) for the type of heating system, i.e.

Domestic (in-house) Fluid Category 3 (C-3). **Non Domestic** (other than in-house) Fluid Category 4 (C-4).

Category 3 systems

The approved method of filling must comprise of the following components in the arrangement shown;

- Control Valve incorporating Double Check Valve on the Mains Cold Water Pipework.
- Temporary Connection Hose, which shall be disconnected after use.
- Control Valve, on the Heating System pipework.

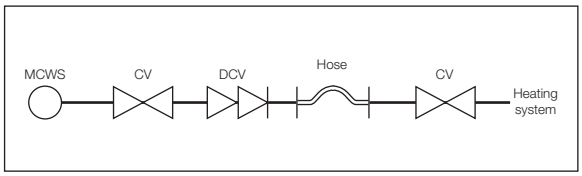

Category 4 systems

The approved method of filling must comprise of the following components in the arrangement shown;

- Control Valve, on the Mains Cold Water pipework.
- Strainer.
- Verifiable Backflow Device with Reduced Pressure Zone (RPZ Valve) Incorporating a 'Type BA' air gap.
- Tundish
- Control Valve, on the Heating System pipework.

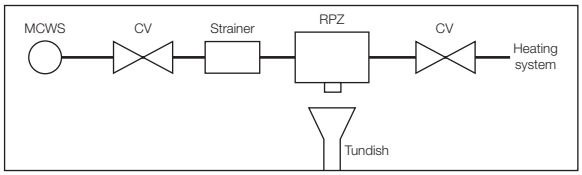

Furthermore, in accordance with BS6644, for boiler/s with an input greater than 60kW (Gross), an automatic pressurization unit must be installed to automatically replenish any lost system water.

A comprehensive range of pressurization units are available from MHS boilers, please visit our website, **www.mhsboilers.com**

Hydraulic system design

- The Strata 1 boiler can be operated to serve a heating load in a number of ways:
  1. Constant flow temperature, with the option to set either high temperature (85°C), medium temperature (70°C) or low temperature (55°C).
  2. Direct-on-boiler weather compensated flow temperatures, with adjustable maximum flow temperature.
  3. Underfloor heating coils via a VT mixing valve with a maximum flow temperature of 55°C plus a second circuit (eg. radiators) operating with direct-on-boiler weather compensated temperatures.(Optional extra MR03 module required).
- Flow to return drop (Δt). The microprocessor controls monitor return temperature and the facility to dictate a set Δt (by pump speed modulation) is a standard and most important feature and will where possible maintain the Δt across the boiler at 20°C, as the lower the return temperature, the higher the operating efficiency. Designing for a Δt 20°C gives the added cost saving advantage of smaller pipe sizes and pumps.
- The Strata 1 includes 'in built' primary pumps with a residual head pressure as shown in the adjacent table.
- Appliances may be installed as single units or in multiples.
- Single units may or may not require additional system pumps which will be dictated by the system configuration and by the index resistance. (Single units may control an additional system pump via an optional extra PR01 module).
- Multiple units (and single units which require additional pumps), must always be installed with a low loss mixing header or similar arrangement - see table.
- The Strata 1 boiler has in built domestic hot water (remote stored) temperature control ability, and if required, the in built pumps may be used to provide the primary flow to a nearby indirect cylinder or calorifier with the boiler controlling a diverter valve in the main flow or return pipework.Alternatively an HWS primary pump may be driven from the boiler.
- BS 6644 Requires that the following devices shall be installed, and provision within the system design must allow for: Low water pressure cut off device, water pressure gauge and a temperature gauge.

In-built boiler pumps approx residual head pressure at max speed

Boiler Model	Pressure Metres wc
38	3.3
45	3.1
60	3.0
75	2.6

Low velocity mixing header diameter sizing guide

Boiler Power kW	Design Δt 20°C
Up to 45	40mm
75	50mm
100	65mm
120	65mm
150	80mm
200	80mm
250	100mm
270	100mm
300	100mm
340	100mm

Tube diameters refer to steel pipe and calculated using data from CIBSE Guide C4

System schematics

Typical single Strata 1 boiler installation using in built pumps to circulate the system (where index resistance < boiler pumps residual head)

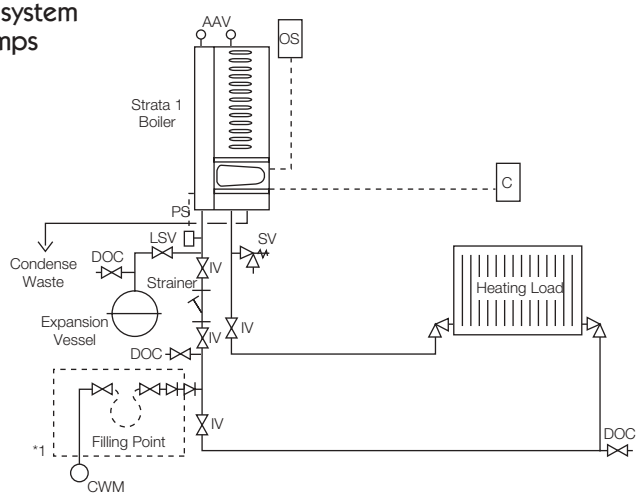

*1
Filling point. In accordance with BS 6644, automatic pressurization units must be installed when the boiler/s input is greater than 60kW.

Typical single Strata 1 boiler installation - heating and domestic hot water using inbuilt pumps to circulate the system (where index resistance < boiler pumps residual head)

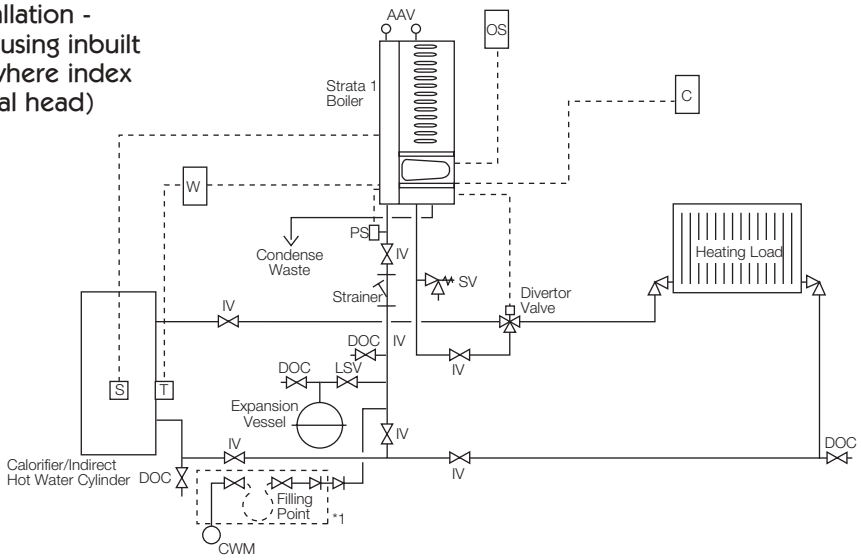

Note:

1. Hot water has priority
2. Divertor valve will require change over contact relay (if not spring return type)
3. Divertor valve must spring return to heating circuit (if spring type)

*1
Filling point. In accordance with BS 6644, automatic pressurization units must be installed when the boiler/s input is greater than 60kW.

Typical single Strata 1 boiler installation using a low velocity mixing header where system index resistance exceeds boiler pumps residual head or system has multiple pumped zones

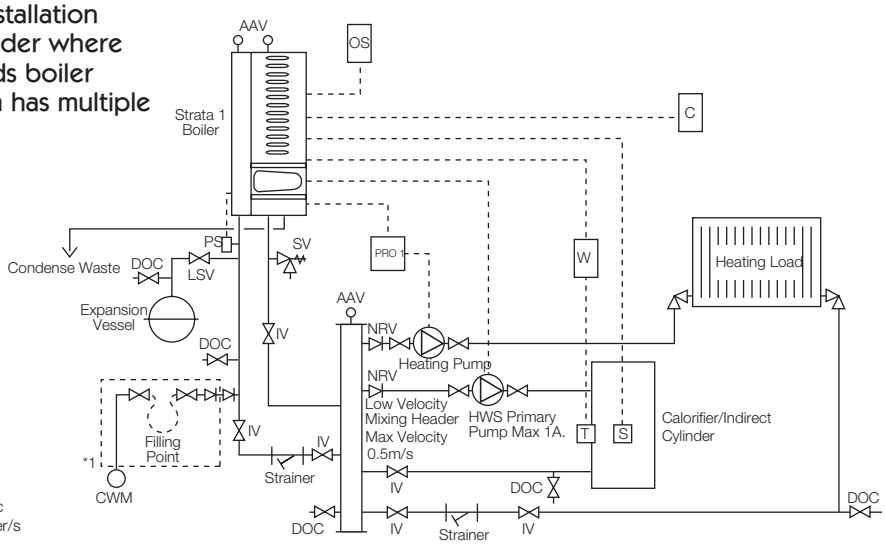

*1
Filling point. In accordance with BS 6644, automatic pressurization units must be installed when the boiler/s input is greater than 60kW.

System schematics

Typical multiple Strata 1 boiler installation

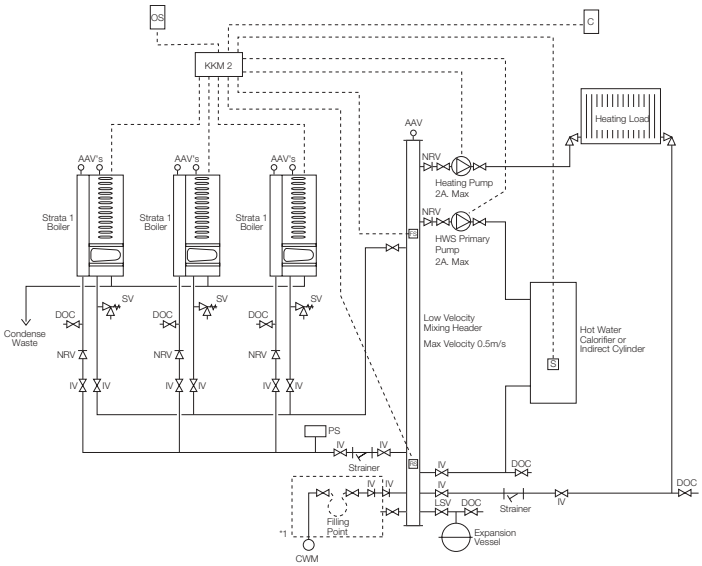

For ease of installation, MHS have a range of accessories including multi boiler manifold pipework and prefabricated low velocity mixing headers.

Please see Strata 1 accessories on pages 13-16.

*1

Filling point. In accordance with BS 6644, automatic pressurization units must be installed when the boiler/s input is greater than 60kW.

Typical single Strata 1 boiler installation serving an HWS zone, radiator zone and underfloor coils zone

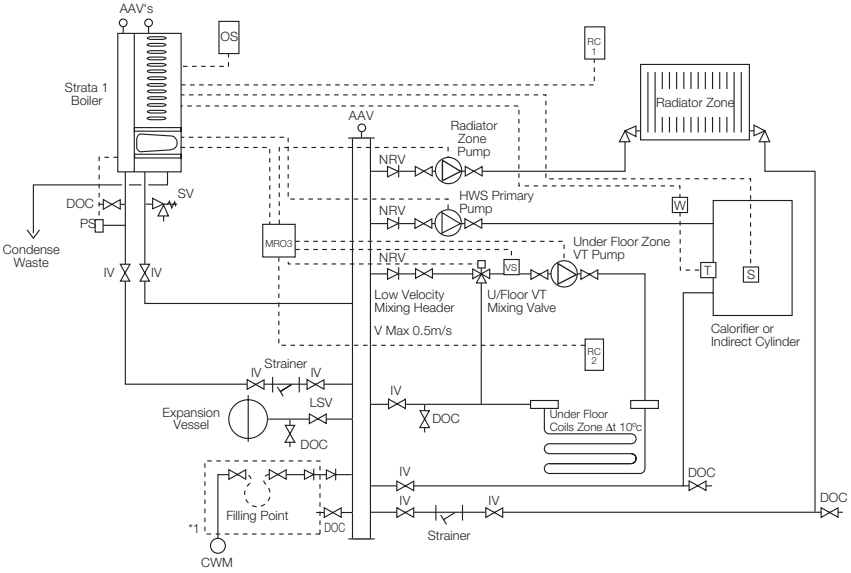

*1

Filling point. In accordance with BS 6644, automatic pressurization units must be installed when the boiler/s input is greater than 60kW.

Note

Optional extra MRØ3 module required.

Legend

OS= Outside air temperature sensor, used where direct-on-boiler weather compensated flow temperatures are required.

C= Room temperature controls e.g. RE2132 modulating room unit from MHS Boilers, or, separate time clock & room thermostat.

S= HWS sensor from MHS Boilers. Gives 24hr HWS operation.

W/T= Alternative to "S" where "W" is a time switch in series with a cylinder thermostat "T". Allows for timed HWS.

PRO1= Pump regulation module from MHS Boilers. Allows heating pump to be driven from boiler, providing for auto operation, frost protection running & summer standstill exercising.

Must be used where RE2132 modulating room unit is installed to a single boiler. Max pump motor load 2A.

PS= Low water pressure cut off switch.

FS= Flow temperature sensor.

RS= Return temperature sensor.

KKM2= Modulating Kaskade Manager. Up to 9Nr boilers may be controlled using 2Nr linked KKM2's.

MRO3= Pumps and mixer regulation control box from MHS Boilers provides pump control for both heating zones i.e. auto operation, frost protection and summer stand still protection running. Provides drive for underfloor coil zone VT mixing valve with max flow temperature limitation set at 55ºC. Includes ratio setter for compensation of under floor coils. Max pump motor loads 2A.

RC1= RE2132 modulating room unit from MHS Boilers provides Time & Temperature control for radiator heating zone.

RC2= As RC1 but for underfloor coil zone.

VS= Underfloor zone VT flow sensor (supplied with MR03).

Example of an incorrect installation

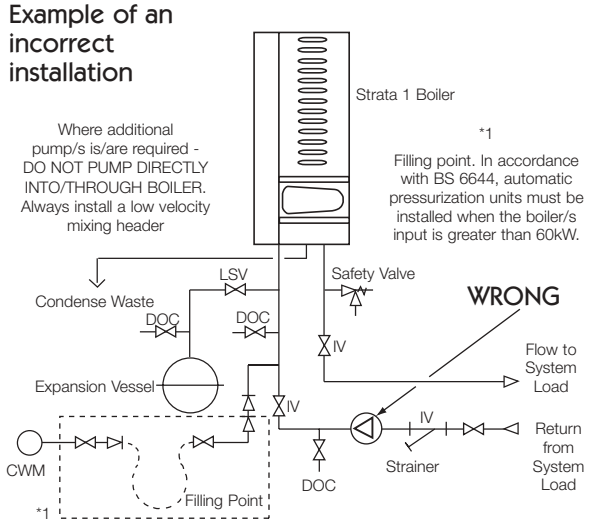

Guidance on flue systems

Flue systems

The Strata 1 has an excess pressure combustion system that allows the appliance to be exhausted over extended distances using small OD flue components.

The flue gas temperature is extremely low (typically the same as the flow water temperature), which allows the use of easy to install PPS (polypropylene) flue pipe and fittings.

The appliance can take combustion air from the room in which it is installed (conventional application) or can be room sealed (fanned balanced flue) using a concentric flue arrangement of a PPS flue duct within a galvanised metal air duct, finished in off-white RAL 9016 or an installation comprising two separate tubes. A full range of flue pipe and air duct components including roof and wall terminals is available from MHS Boilers.

Short list of flue components

- 80/125 concentric wall terminal set:- comprises 845mm straight length with made on terminal, 93° concentric bend and wall sealing plates. Effective length 715mm to outside face of wall.
- 80/125 concentric roof terminal set:- comprises 1100mm straight length with made on terminal (effective length approx 400mm to finished roof surface) and 1 Nr 125 wall bracket.
- 80/125 concentric wall terminal with extendable vertical discharge. Effective length 715mm to outside face of wall.
- Room sealed chimney cap.
- 125 pitched roof tile flashing for use with concentric roof terminal set adjustable between 25° to 50°.
- 125 flat roof terminal/chimney top flashing for use with concentric roof terminal set.
- 80/125 concentric flue tube set 1000mm long.
- 80/125 concentric flue tube set 500mm long.
- 80/125 concentric 45° bend.
- 80/125 concentric 93° bend.
- 80mm PPS flue tube 1000mm long.
- 80mm PPS 45° bend.
- 80mm PPS 93° bend.
- 80mm wall bracket.
- 125mm wall bracket.
- 80/125 concentric to 2x80mm tubes adaptor.

NB. All fittings and tube lengths are spigot and socket ended.

Other available flue components are listed in the component resistance table below. For larger diameters and fittings for multiple boiler flue applications, plus flexible plastic flue liners and accessories, contact MHS Boilers' Sales Department.

Calculating flue resistance

The excess pressure available for overcoming the frictional resistance of a flue system is 100 P.a.

The adjacent table of flue component resistances will assist the designer in calculating total flue system frictional loss.

If the total installed flue system resistance exceeds 100 P.a., then the result will be a reduction in boiler output. Reference to the "Effect of Flue System Resistance On Boiler Output", graphs will assist. If the resistance of a proposed flue system has an unacceptable effect on boiler output, then a larger diameter flue tube should be selected.

Thermal up-draught is generated in a vertical flue system, reducing the resistance of the system. Reference to the "Thermal Up-draught Graph" will provide a figure in P.a., which may be deducted from the total calculated flue system resistance.

NB. Does not apply to horizontal sections of a flue system.

Component Resistance P.a.	38	45	60	75
80/125 Concentric Wall Terminal	5.0	7.5	11.0	16.0
80/125 Concentric Roof Terminal Without Rain Cap	5.0	7.5	11.0	16.0
80/125 Concentric Roof Terminal With Rain Cap	7.5	11.25	16.5	24.0
1m length 80/125 Concentric Tube	4.0	5.5	8.5	12.0
93° 80/125 Concentric Bend	4.0	5.5	8.5	12.0
45° 80/125 Concentric Bend	2.0	2.75	4.25	6.0
80/125 Concentric To 2 x 80 Tubes Adaptor	2.5	4.0	6.0	10.0
1m length DN 80 PPS Tube Carrying Fluegas	2.5	5.0	7.5	11.0
1m length DN 80 PPS Tube Carrying Combustion Air	2.0	3.0	5.0	7.0
93° DN 80 PPS Bend Carrying Fluegas	2.5	5	7.5	11.0
93° DN 80 PPS Bend Carrying Combustion Air	2.0	3.0	5.0	7.0
45° DN 80 PPS Bend Carrying Fluegas	1.5	2.5	4.0	5.5
45° DN 80 PPS Bend Carrying Combustion Air	1.0	1.5	2.5	3.5
Room Sealed Chimney Cap DN 80	5.0	7.0	10.0	15.0
DN 80 x 110 PPS Increaser Piece-Fluegas or Air	1.0	1.0	1.0	1.0
93° DN 110 PPS Bend Carrying Fluegas	1.0	2.0	2.5	4.0
93° DN 110 PPS Bend Carrying Combustion Air	0.5	1.5	2.0	2.0
45° DN 110 PPS Bend Carrying Fluegas	0.5	1.0	1.3	2.0
45° DN 110 PPS Bend Carrying Combustion Air	0.2	0.8	1.0	1.0
1m length DN 110 PPS Tube Carrying Fluegas	1.0	2.0	2.5	4.0
1m length DN 110 PPS Tube Carrying Combustion Air	0.5	1.5	2.0	2.0
DN 80 Open Termination With Mesh	2.5	4.0	5.5	8.0
DN 110 Open Termination with Mesh	1.5	2.0	3.0	4.0
80/125 Concentric Wall Terminal With Vertical Discharge	5.0	7.5	11.0	16.0
80/125 To 110/150 Concentric Increaser	1.5	2.0	3.0	5.0
110/150 Concentric Wall Terminal	2.0	3.0	4.0	7.0
110/150 Concentric Roof Terminal	2.0	3.0	4.0	7.0
1m length 110/150 Concentric Tube	1.5	2.0	3.0	5.0
93° 110/150 Concentric Bend	1.5	2.0	3.0	5.0
45° 110/150 Concentric Bend	1.0	2.0	2.0	3.0

Examples of calculating flue pressure loss

Example 1

A Strata 1-60 boiler is installed with a concentric flue system which takes an all horizontal route to a wall terminal. Length of flue = 3m including one 93° bend.

Resistance =

3 x 1m length 80/125 concentric tube @ 8.5 Pa = 25.5
1 x 93° 80/125 concentric bend @ 8.5 Pa = 8.5
1 x 80/125 concentric wall terminal @ 11.0 Pa = 11.0
Total Resistance = 45 Pa

Conclusion: Total resistance is less than 100 Pa, therefore, no alternative design required, no effect on boiler output, or positioning required.

Example 2

A Strata 1-45 boiler is installed with a concentric flue system which takes a part horizontal, part vertical route to a roof terminal with rain cap.

Length of horizontal section = 3m, vertical section = 12m, system includes 3 x 93° bends.

Resistance =

15 x 1m lengths 80/125 concentric tube @ 5.5 Pa = 82.5
3 x 93° 80/125 concentric bend @ 5.5 Pa = 16.5
1 x 80/125 roof terminal @ 11.25 Pa = 11.25
Total Resistance - 110.25 Pa

Take into account that 12m of vertical (assume uninsulated, as air for combustion direct from outside air surrounds the flue gas tube) flue creates 20 Pa of up-draught, then final resistance = 110.25 - 20 = 90.25 Pa.

Conclusion: Final operating resistance is less than 100 Pa, therefore, no alternative design required and no effect on boiler output.

Example 3

A Strata 1-75 boiler is installed (non room sealed) with a proposed flue using DN 80 PPS single skin flue components which takes a part horizontal, part vertical route to a vertical open termination with bird mesh.

Length of horizontal section = 4m, length of vertical (uninsulated) section = 11m with 4 x 93° bends, and 2 x 45° bends.

Resistance =

15 x 1m lengths DN 80 PPS tube @ 8.0 Pa = 120
4 x 93° DN 80 PPS bends @ 8.0 Pa = 32
2 x 45° DN 80 bends @ 4.0 Pa = 8.0
1 x DN 80 open termination @ 8.0 Pa = 8.0
Total Resistance: 168 Pa

Take into account that 11m of vertical uninsulated flue creates 18 Pa of up-draught, then final resistance would be 168 - 18 = 150 Pa.

Reference to the graph of resistance effect on boiler output shows the output would be reduced to approximately 67kW. If this is unacceptable, then the flue resistance must be re-calculated using a larger size flue tube as shown below or consideration given to moving the boiler position.

Re-calculating proposed flue installation using DN110.
15 x 1m lengths DN 110 PPS tube @ 3.0 Pa = 45
4 x 93° DN 110 bends @ 3.0 Pa = 12
2 x 45° DN 110 bends @ 1.5 Pa = 3.0
1 x DN 110 open termination @ 4.0 Pa = 4.0
Total Resistance: 64 Pa

Take into account thermal up-draught created (as before) 18 Pa. Therefore, operating resistance = 64 - 18 = 46 Pa, with no effect on boiler output.

Thermal updraught when flue gas temp 80°C and outside temp -5°C

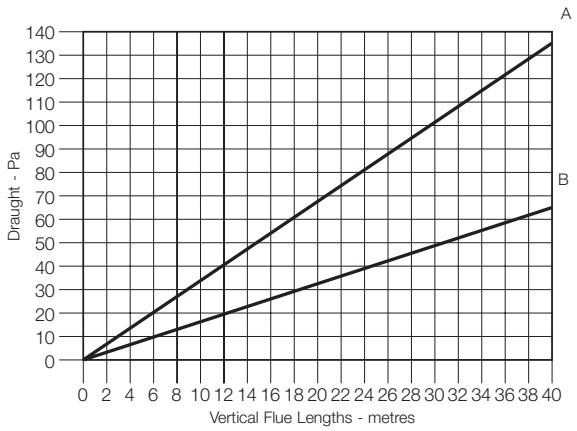

A = Insulated or within the building
B = Uninsulated and exterior to the building

Effect of flue system resistance on boiler output

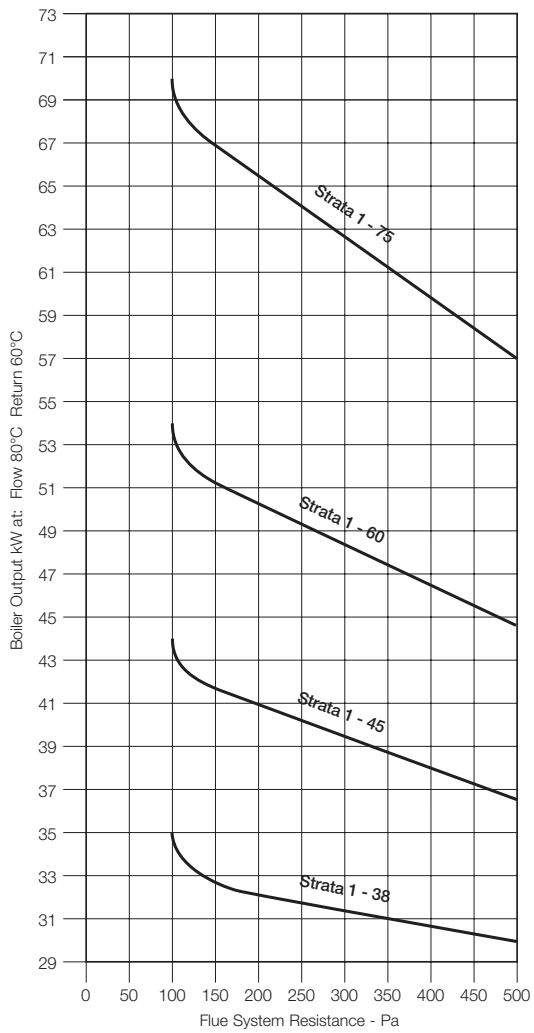

Flue system design

Detail of concentric bend supplied with wall terminal set

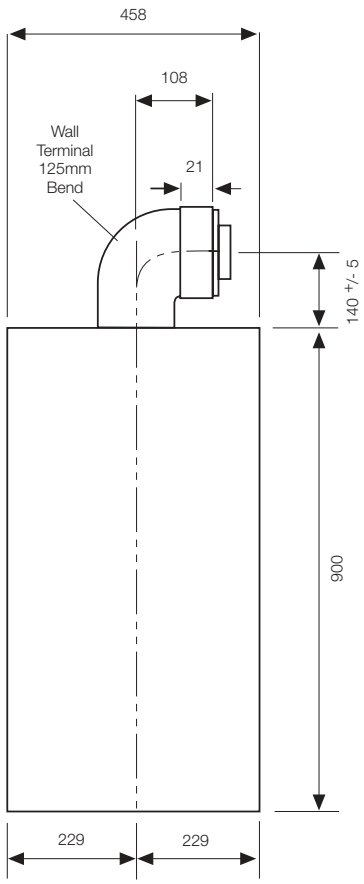

Front elevation
Dimensions in millimetres.

Typical room sealed wall terminal installation

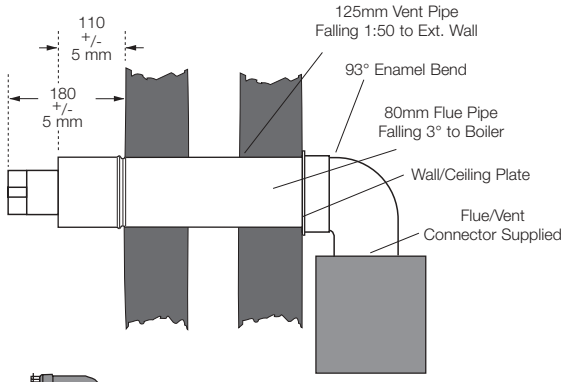

Typical room sealed installation using vertically extendable wall terminal set with 80 OD flue tube extended to discharge in an alternative position on same wall aspect used in cases where low level pluming may cause nuisance.

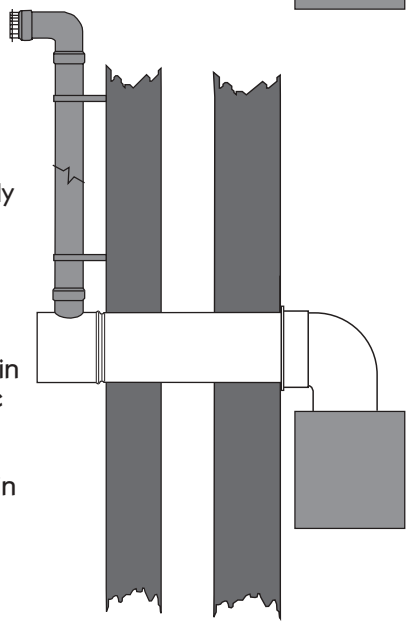

Typical room sealed vertical flue installation using concentric roof terminal set

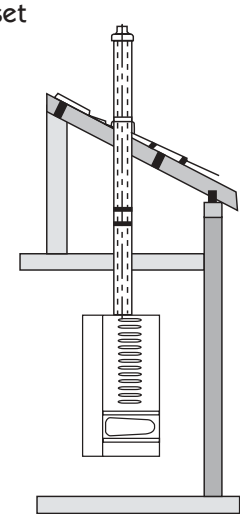

Typical modular flue arrangement

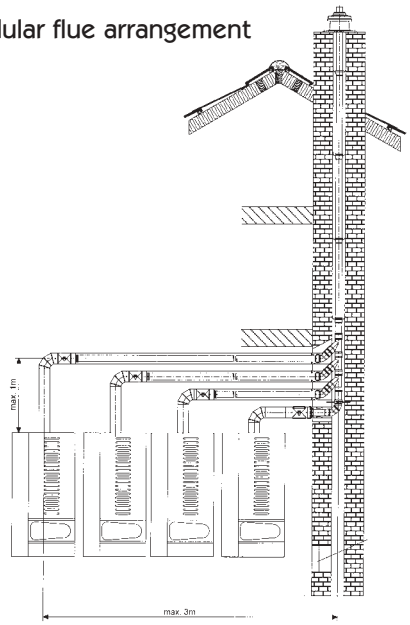

Installation accessories

Modular boiler connection manifolds

- Available to suit Strata 1 45, 60, & 75 models
- Prefabricated for speed of installation
- Includes individual boiler isolation valves and non return valves
- Wall mounted
- Options to serve up to 5 boilers (dependent upon model) with total output up to 300kW
- Connection to system possible at either end
- Prefabricated easy fit insulation jackets available.

Vertical low velocity headers

- Prefabricated for speed of installation
- Avoids design error
- Headers available to suit single and multiple boiler applications up to 300kW
- Wall mounted
- Prefabricated easy fit insulation jackets available.

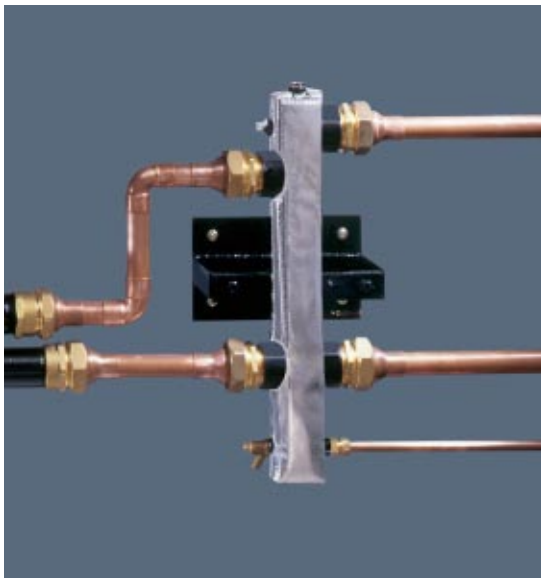

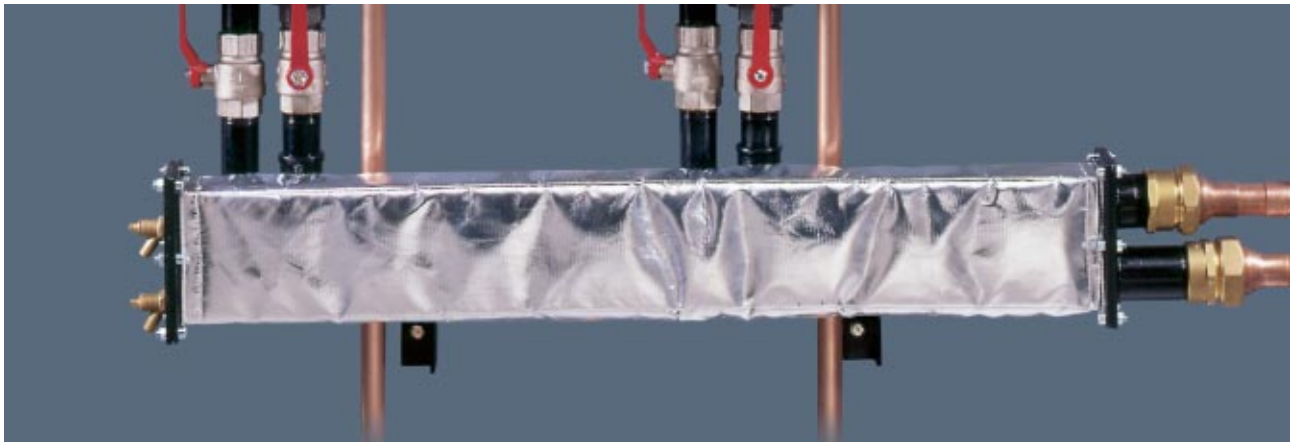

To compliment the highly successful range of Strata 1 wall mounted condensing boilers, MHS Boilers offer a line of dedicated installation accessories intended to simplify and enhance the installation of single or modular Strata 1 boilers.

The range of accessories covers prefabricated vertical low velocity headers, prefabricated modular boiler connection manifolds and sealed system components.

It is recommended to read this publication in conjunction with the specific sales literature on Pisces pressurisation managers.

Modular boiler manifolds

Manufactured from boiler quality carbon steel in box section form, comprises of a common flow tube and a common return tube mounted one above the other with a 20mm separation air gap (to avoid heat exchange) with boiler flow and return connection pipe assemblies. The boiler connection pipes include quality lever action ball type isolation valves, a spring loaded non-return valve and union fittings.

Supplied with wall mounting brackets and finished in black primer paint finish, the modular boiler manifolds are available in 2 models:-

"Type 2" to allow for the connection of 2 boilers

"Type 3" to allow for the connection of 3 boilers

The manifolds are flanged at either end to allow for either a blank (with tappings for draincocks), a system connection piece or another manifold to be attached. Nuts, bolts and gaskets are supplied.

An optional addition is an easy fit insulating jacket fabricated from 10mm thick continuous E-glass filament yarn fleece with an outer shell of Aluminiumised woven glass fibre fabric with velcro fastenings. Modular boiler manifolds are offered for the Strata 1 45, 60 & 75 models only.

Vertical low velocity headers

Manufactured from boiler quality carbon steel in box section form and having connections for; boiler/s flow and return, system load flow and return, drain point, fill point, air release and flow temperature sensor pocket.

Supplied in black primer finish with wall mounting bracket. An option to the supply, is an easy fit insulating jacket fabricated from 10mm thick continuous E-glass filament yarn fleece with an outer shell of Aluminiumised woven glass fibre fabric with velcro fastenings.

The headers are available in 3 models:-

"Type A", to suit all Strata 1 single boiler applications and modular boiler applications up to 90kW

"Type B", to suit modular boiler applications with output greater than 90kW and up to 155kW

"Type C", to suit modular boiler applications with output greater than 155kW and up to 300kW

The vertical headers are intended to compliment the "modular boiler manifolds" having the same wall surface to connection centre line dimension, and are available for the complete range of Strata 1 boilers.

The purpose of a low velocity header is to allow system zone pumps to be installed without a cross influence of flow rates between the zone pumps and the boiler's own inbuilt modulating pumps.

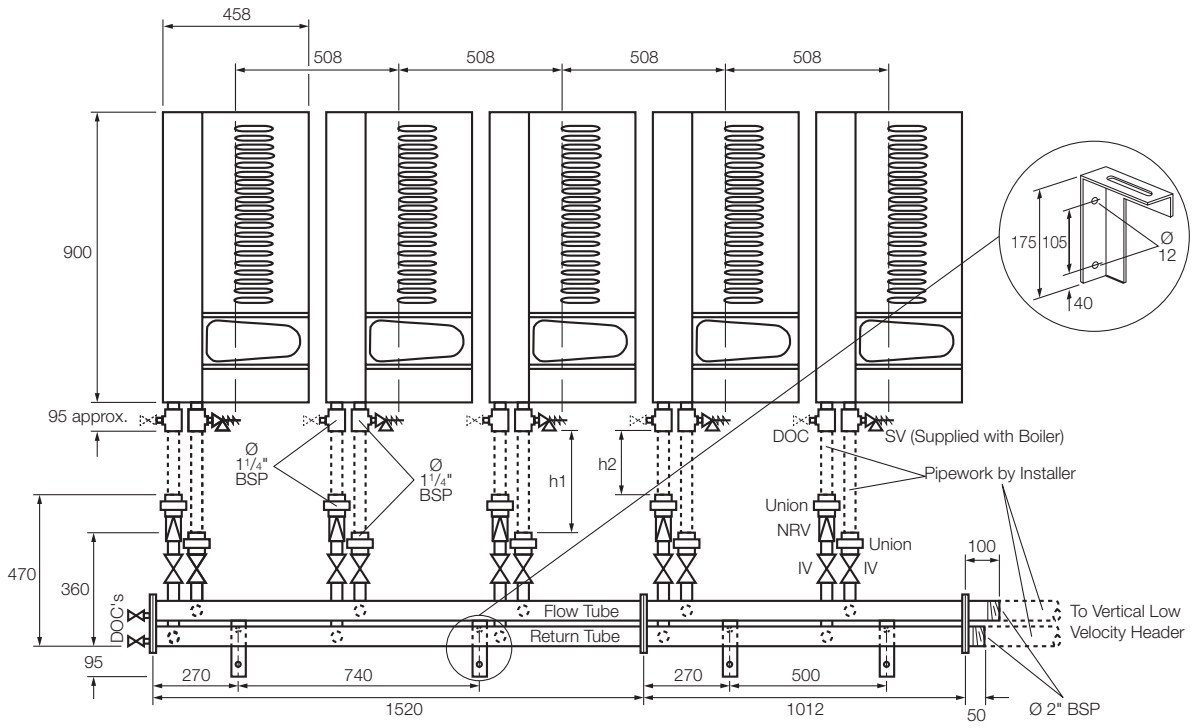

Important note

The vertical low velocity header may be connected from either the left hand end or right hand end of the bolier manifold.
h1 / h2 = determined by site conditions/installer.
Dimensions in millimetres.

Accessory selection

Note

Modular boiler manifolds are not available to suit the model 38 boiler.

		Modular Boiler Manifolds		Manifold Flanges		Vertical Low Velocity Headers		
Strata 1 boilers	Max Output kW	Type 2	Type 3	Blank/ Draincock	2" BSP Connection	Type A 50 x 50	Type B 60 x 60	Type C 100 x 100
1 x 38 / 38 combi	37.8	NA	NA	NA	NA	1	NA	NA
1 x 45	45.2	NA	NA	NA	NA	1	NA	NA
1 x 60	59.9	NA	NA	NA	NA	1	NA	NA
1 x 75	75.6	NA	NA	NA	NA	1	NA	NA
2 x 38 / 38 combi	75.6	NA	NA	NA	NA	1	NA	NA
2 x 45	90.4	1	NA	1	1	1	NA	NA
2 x 60	119.8	1	NA	1	1	NA	1	NA
2 x 75	151.2	1	NA	1	1	NA	1	NA
3 x 38 / 38 combi	113.4	NA	NA	NA	NA	NA	1	NA
3 x 45	135.6	NA	1	1	1	NA	1	NA
3 x 60	179.7	NA	1	1	1	NA	NA	1
3 x 75	226.8	NA	1	1	1	NA	NA	1
4 x 45	180.8	2	NA	1	1	NA	NA	1
4 x 60	239.6	2	NA	1	1	NA	NA	1
4 x 75	302.4	2	NA	1	1	NA	NA	1
5 x 45	226	1	1	1	1	NA	NA	1
5 x 60	299.5	1	1	1	1	NA	NA	1

Easy fit insulating jackets for modular boiler manifolds and vertical low velocity headers

Thickness: 10mm
Thermal capacity: 0.8kJ/Kg °C
Density: 100Kg/m3
Max temperature: 550°C
Tensile strength: 92 Newtons

Coefficient of thermal conductivity

Temperature:	100°C	160°C	200°C
TO3Y (w/m):	40.3°C	48.4°C	56.5°C

Vertical low velocity headers

Data		Type A	Type B	Type C
Tappings	a	1/2" BSP-F	1/2" BSP-F	1/2" BSP-F
Tappings	b	11/4" BSP-F	2" BSP-F	2" BSP-F
W	mm	50	60	100
Depth	mm	50	60	100
Distances from wall to L tappings	mm	260	260	260
G	mm	285	280	470
H	mm	345	350	540
I	mm	95	120	120
Duty @ 20k Δt kW		Up to 90	91 to 155	156 to 300

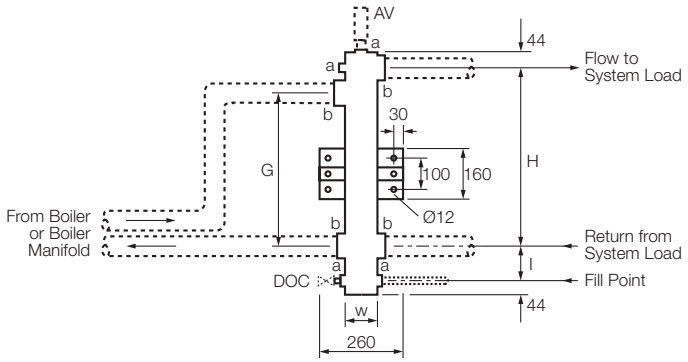

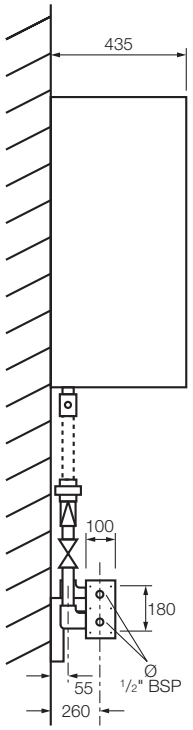

Important note

Vertical low velocity headers are reversible to allow connection from boiler or boiler manifold from either direction.
Dimensions in millimetres.

Electrical connection

Strata 1-38

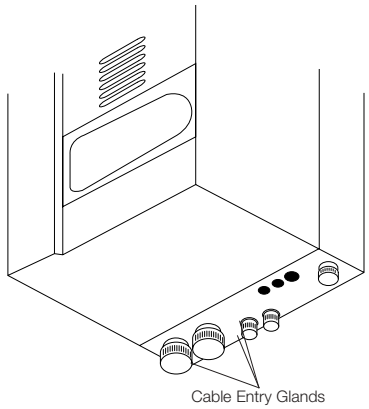

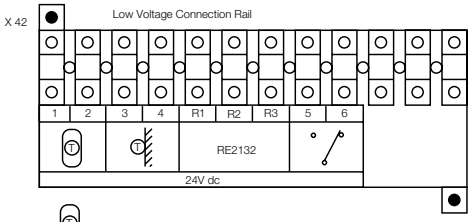

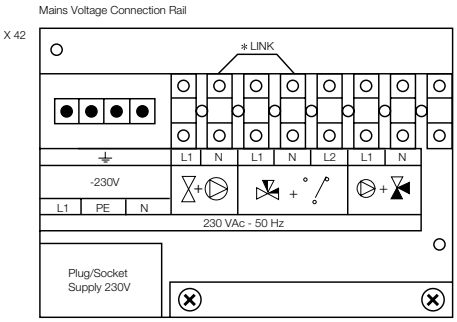

= Cylinder Thermostat or HWS Temperature Sensor (Not Combi)

= Outside Air Temperature

RE2132 = RE 2132 Modulating Room Unit

= Has No Function

= Earth Connection Rail

= External Gas Safety Shut Off Valve - LPG Only.
Or External Central Heating Pump - Install LINK * As Shown.

= Room Thermostat / MRO3 Mixer Control

= HWS Primary Pump or Divertor Valve

Strata 1-45, 60, 75

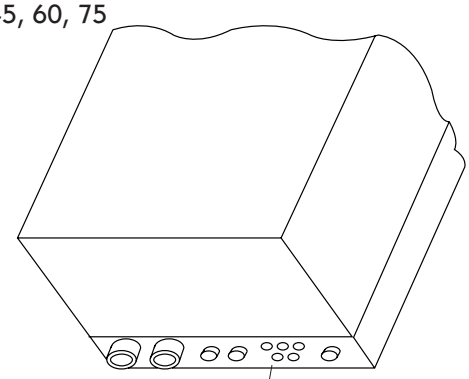

Cable entry glands

Position of Weiland Plugs

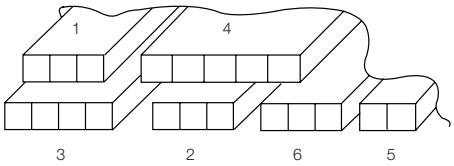

Weiland Plug
Nr.: 1

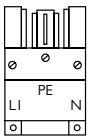

Permanent Supply (L1+PE+N)

Weiland Plug
Nr.: 4

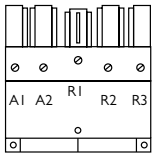

Outside Air Sensor (A1+A2)
RE2132 Room Unit (R1+R2+R3)
KKM2 Kaskade Manager (R2+R3)
0-10v via an adapter '+' R2 '-' R1
0-3v '+' R2, '-' R1

Weiland Plug
Nr.: 3

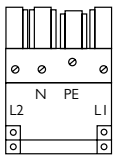

Room Thermostat Volt free enable (L2+L1)
PRO1/MRO3 (N+PE+L1)

Weiland Plug
Nr.: 2

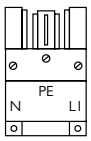

External Gas Safety Shut off Valve-LPG only (if req'd) (N+PE+L1)

Weiland Plug
Nr.: 6

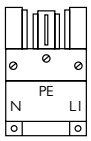

HWS Divertor Valve or HWS Primary Pump (N+PE+L1)

Weiland Plug
Nr.: 5

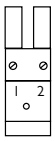

HWS Sensor or Volt free Thermostat

MHS BOILERS

A member of the Modular Heating Group Plc

35 Nobel Square, Burnt Mills Industrial Estate, Basildon, Essex SS13 1LT Tel: 01268 591010 Fax: 01268 728202

www.mhsboilers.com

This publication is issued subject to alteration or withdrawal without notice.
The illustrations and specifications are not binding in detail. All offers and sales are subject to the Company's current terms and conditions of sale.